Project:

Item Number:

Quantity:

INDUCTION RANGE: COMMERCIAL COUNTERTOP

MODELS: **69500** **1.8 kW @ 120V (U.S. Only)**
69510 **1.4 kW @ 120V (Canada Only)**

Induction Range: Intrigue™ Commercial Countertop

DESCRIPTION

The portable countertop induction range is designed for use in light to medium duty front-of-the-house cooking. Model 69500 will plug into standard 15A outlets which are readily available in most restaurants and kitchens.

The induction range comes complete with a six-foot power cord and plug. The case frame is made from 18-gauge 304 stainless steel with a ceramic top. The ceramic top is easily cleaned with a mild cleaner.

The induction range is equipped with a variety of safety features including:

- ❑ Over-heat protection
- ❑ Small-article detection
- ❑ Pan auto-detection function
- ❑ Empty-pan shut-off
- ❑ Safety auto-shut-off function

FEATURES

- ❑ 9 heating levels with optimum power output to different pans.
- ❑ 7 temperature holding positions.
- ❑ Easy to read LED bar for power level.
- ❑ Stainless case and ceramic top.
- ❑ Sloped control panel for runoff of liquid spills.
- ❑ Push button controls for easy cleaning.
- ❑ Heating function for adjustable power settings.
- ❑ Warming function to maintain preset temperatures.
- ❑ Rubber feet to prevent slipping of appliance.
- ❑ Unit comes with cord and plug and does not require hard wiring.
- ❑ Full one-year parts and labor warranty.

IMPORTANT

- ❑ This appliance is intended for use with induction-ready cookware.
- ❑ All models require adequate unrestricted intake and exhaust air ventilation for proper operation of the controls. The maximum intake temperature must not exceed 110°F (43°C). Temperatures are measured in ambient air while all appliances in the kitchen are in operation.
- ❑ Countertop models require a minimum clearance of 3 inches at the rear and 1 inch at the bottom.

Agency Listings - Model 69500

This device complies with Part 18 FCC Rules.

Agency Listings - Model 69510

This device complies with Part 18 FCC Rules.

Approvals

Date:

Induction Range: Commercial Countertop

The Vollrath Company, L.L.C.

Setting the Standard™

www.vollrathco.com

The Vollrath Company, L.L.C.
1236 North 18th Street
Sheboygan, WI 53082-0611
U.S.A.
Main Tel: 800.624.2051
Service Tel: 800.628.0832
FAX: 800.752.5620

Vollrath of Canada, Ltd.
6320 Danville Road, Unit 1
Mississauga, Ontario L5T 2L7
Canada
Tel: 905.565.1167
Tel: 800.695.8560
FAX: 905.565.1168

INDUCTION RANGE: COMMERCIAL COUNTERTOP

MODELS: **69500** **1.8 kW @ 120V (U.S. Only)**
69510 **1.4 kW @ 120V (Canada Only)**

DIMENSIONS

- Overall dimension: 13.00" wide x 16.7" deep x 4.0" high (33.02 cm x 44.418 cm x 10.16 cm)
- Shipping container dimension: 17.8" wide x 21.5" deep x 8.8" high (45.212 cm x 54.61cm x 22.352 cm)
- Dimensions shown in inches (cm).

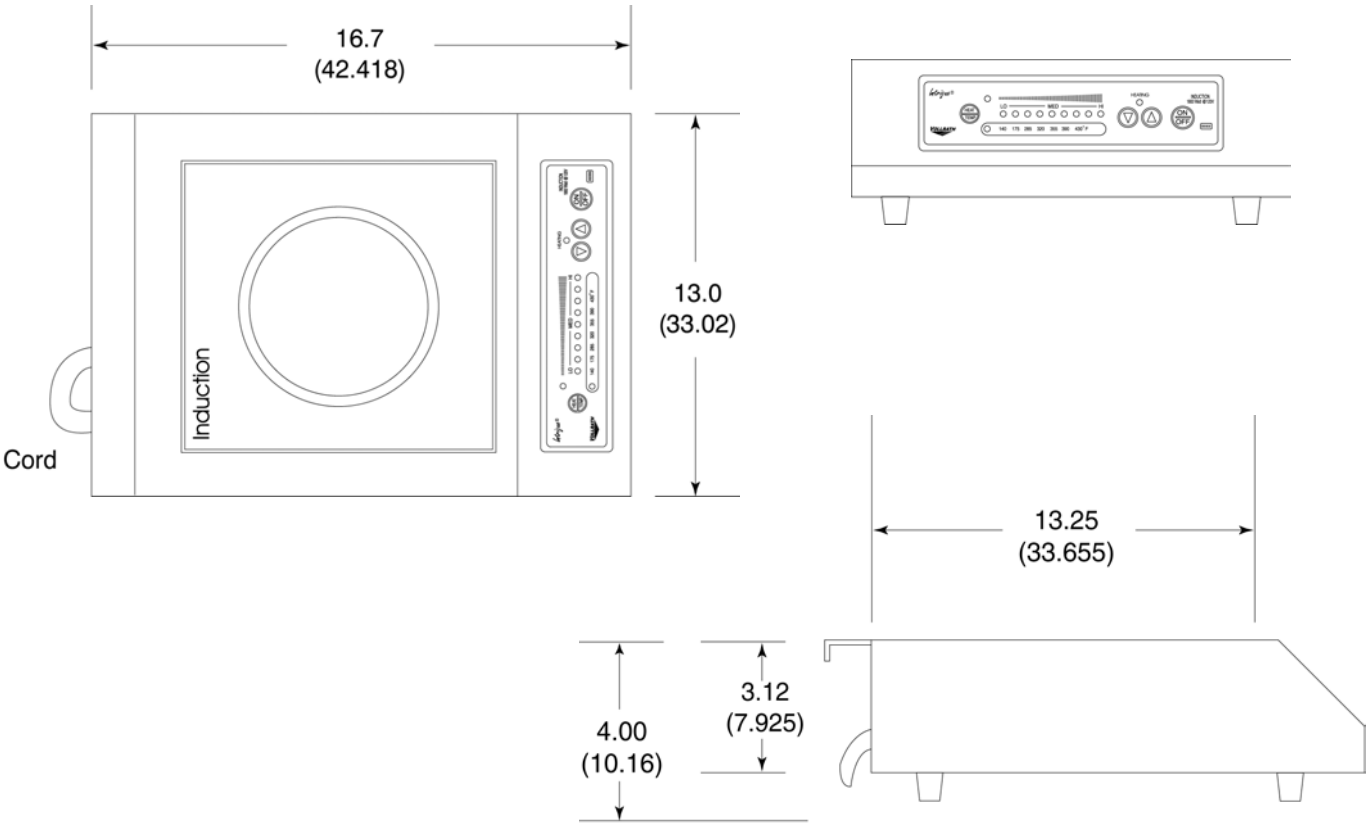

Unit shown with .87 inch Feet

ELECTRICAL SPECIFICATIONS - 1 PHASE, 60 HZ

Model	kW Rating	Volts	Nominal Amps	NEMA Plug	Remarks
69500	1.8 kW	120V AC	15	5-15P	
69510	1.4 kW	120V AC	12	5-15P	

Receptacles

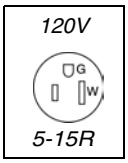

The Vollrath Company, L.L.C.
1236 North 18th Street
Sheboygan, WI 53082-0611
U.S.A.
Main Tel: 800.624.2051
Service Tel: 800.628.0832
FAX: 800.752.5620

Vollrath of Canada, Ltd.
6320 Danville Road, Unit 1
Mississauga, Ontario L5T 2L7
Canada
Tel: 905.565.1167
Tel: 800.695.8560
FAX: 905.565.1168

www.vollrathco.com

©2003 The Vollrath Company L.L.C Form Number L35515 Rev. 12/03
Printed in USA