T&S BRASS AND BRONZE WORKS, INC.
2 SADDLEBACK COVE / P.O. BOX 1088 / TRAVELERS REST, SC 29690
PHONE 800-476-4103 FAX 864- 834-3518

REG.#A2601
ISO #9001

Model No.
B-7122-C01
Item No.:

Job Name:

Architect/Engineer Approval:

Notes:

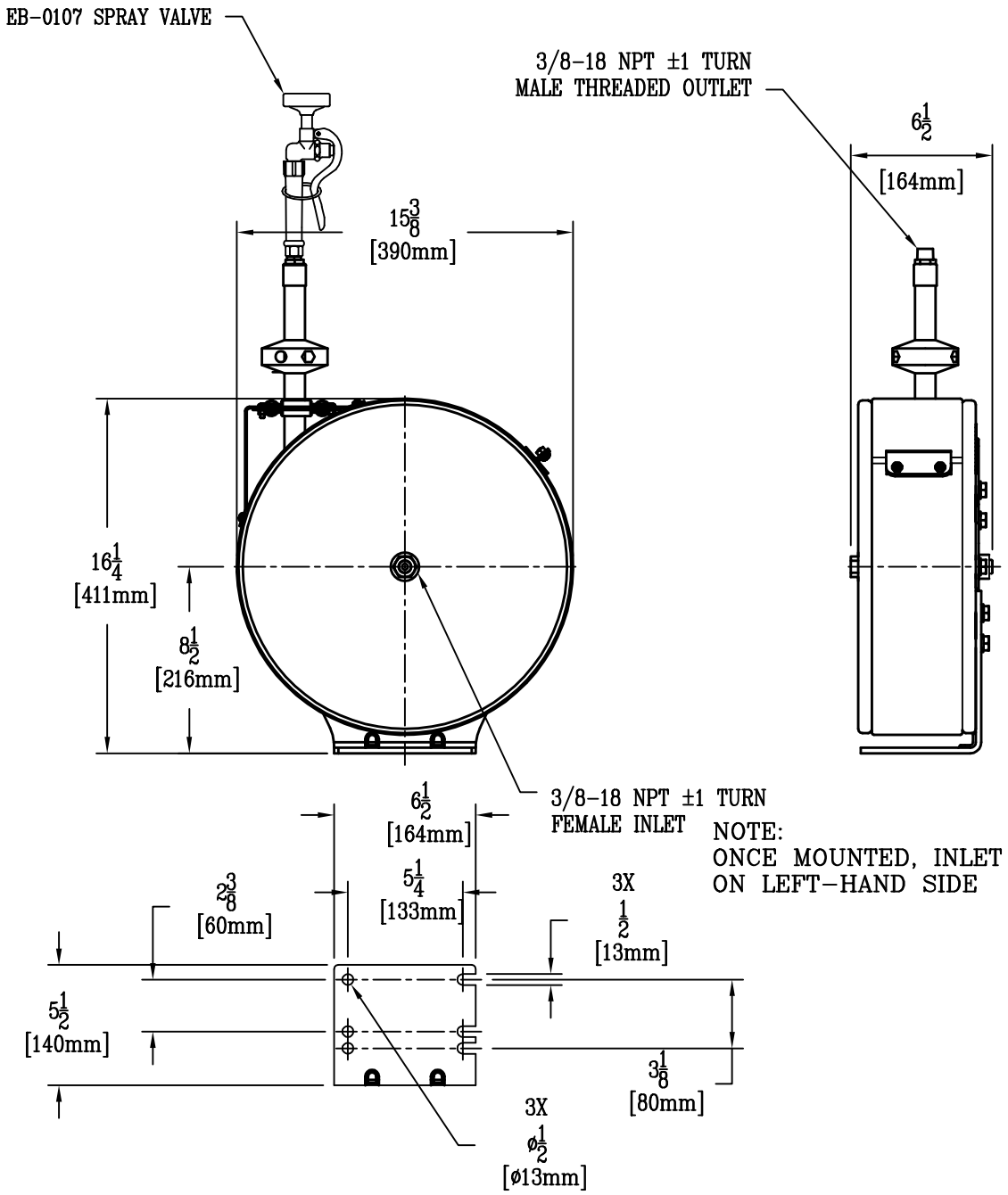

Product Description:
HOSEREEL, CLOSED, STAINLESS STEEL
30 FT OF 3/8 DIA. BLUE HOSE AND
EB-0107 SPRAY VALVE

Drawn:	Checked	Scale:
JRM	JHB	1 : 8
Approved		Date:
JHB		6/9/05