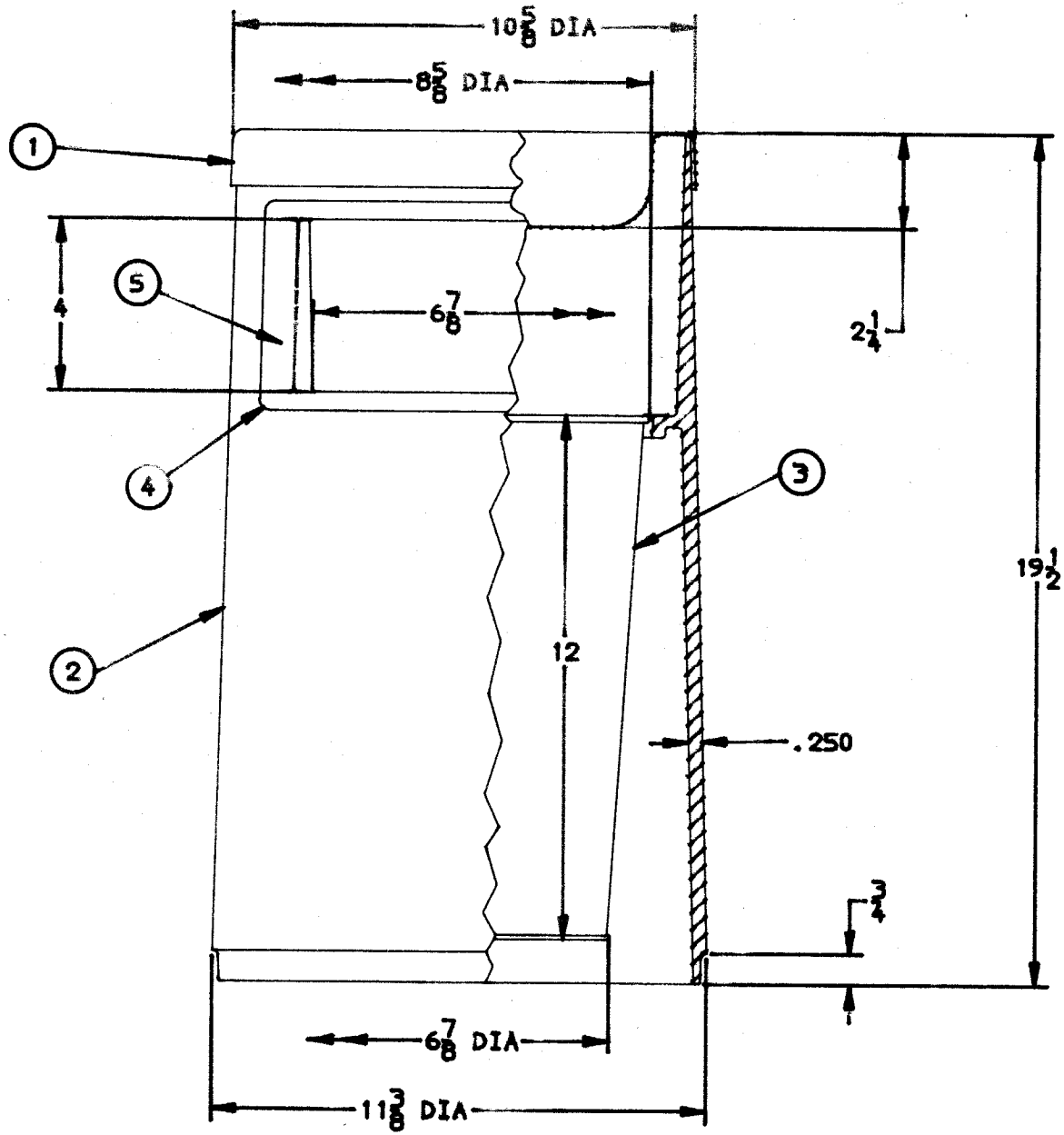

No.	Description/Materials
1	TOP - STL
2	BASE - FOAMED PE
3	LINER - CRS
4	TRIM BEZEL - STY
5	FASTENER - STY

total part wt. 8 LBS. 8 OZS.

capacity

agency approvals

colors

miscellaneous METAL TOP - 2588

LINER - 2595

Product Specifications

RUBBERMAID COMMERCIAL PRODUCTS INC.

product name ASH / TRASH SMOKING URN W/ LINER

product no. 2586 revision 1

product no. 2586